330:148 (g) Machine Design
Assignment: 6 Spur Gears (Ch 11)

To be submitted by October 15, 2007

1. If a gear has 48 teeth, a 14½° involute profile, and is a 16 pitch, find the following properties: a. Pitch diameter, b. Circular pitch, c. Equivalent module, d. Closest standard module, e. The centre-to-centre distance if mated with an 18-tooth gear of the same pitch. (Ans. 3 in, 0.1963 in, 1.5875 mm, 1.5, 2.0625 in)

2. Determine gear ratio, output speed, direction of rotation and output torque for the following input conditions. Check your work by calculating output power and comparing it to input power. Input power is 3 hp rotating at 1,725 rpm clockwise. $N_A = 20$; $N_B = 46$; $N_C = 16$; $N_D = 48$; $N_E = 20$; $N_F = 50$. (Ans. 17.25, 100 rpm, CCW)

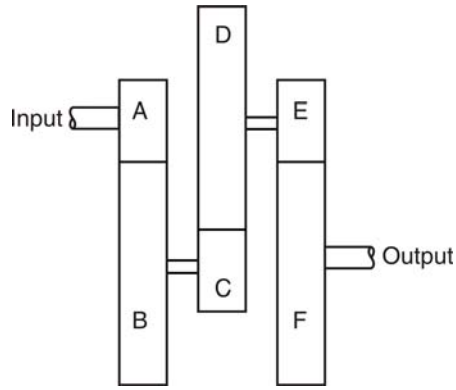

3. Determine gear ratio, output speed, direction of rotation and output torque for the following input conditions. Check your work by calculating output power and comparing it to input power. Input power is 5 hp rotating at 3,600 rpm clockwise. $N_A = 15$; $N_B = 20$; $N_C = 48$; $N_D = 20$; $N_E = 60$. In this problem, if the gears have a diametral pitch of 12, find the centerline distance from gear A to gear C. (Ans. 9.6, 375 rpm, CCW, 4.295 in)

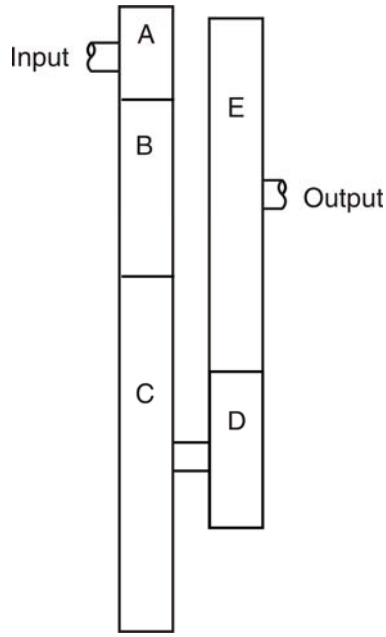

4. Determine gear ratio, output speed, direction of rotation and output torque for the following input conditions. Check your work by calculating output power and comparing it to input power. Input power is 2 hp rotating at 1,080 rpm clockwise. $N_A = 16$; $N_B = 48$; $N_C = 20$; $N_D = 60$; $N_E = 20$; $N_F = 80$. (Ans. 36, 30 rpm, CCW)

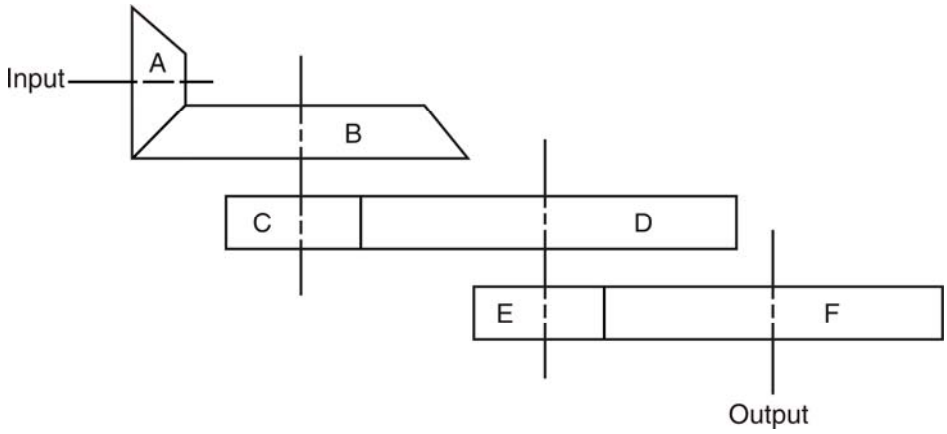

5. A speed reducer is to accept 1800 rpm input shaft and provide a 90 rpm output. The reduction is to take place in two steps. If the minimum number of teeth is eighteen, find the number of teeth in each gear. (Ans. 18/90 × 18/72)

6. A 17-tooth spur pinion has a diametral pitch of 8, runs at 1120 rpm, and drives a gear at a speed of 544 rpm. Find the number of teeth on the gear and the theoretical center-to-center distance. (Ans. 35, 3.25 in)

7. A 15-tooth spur pinion has a module of 3 mm and runs at a speed of 1600 rpm. The driven gear has 60 teeth. Find the speed of the driven gear, the circular pitch and the theoretical center-to-center distance. (Ans. 400 rpm, 9.42 mm, 112.5 mm)

8. A spur gear set has a module of 4 mm and a velocity ratio of 2.80. The pinion has 20 teeth. Find the number of teeth on the driven gear, the pitch diameters, and the theoretical center-to-center distance. (Ans. 56, 224 mm, 80 mm, 152 mm)

9. A 21-tooth spur pinion mates with a 28-tooth gear. The diametral pitch is 3 teeth/in and the pressure angle is 20º. Find the following values: the addendum, dedendum, circular pitch, tooth thickness, and base circle diameters. (Ans. 0.333 in, 0.417 in, 1.047 in, 0.523 in, 6.578 in, 8.77 in)

10. A gear-set consists of a 16-tooth pinion driving a 40-tooth gear. The diametral pitch (P) is 2, and the addendum and dedendum are 1/P and 1.25/P respectively. The gears are cut using a pressure angle of 20º. Compute the circular pitch, the center distance and the radii of the base circles. In mounting the gears, the center distance was incorrectly made ¼ in longer. Compute the new values of pressure angle and the pitch circle diameters. (Ans. 1.57 in, 14 in, 3.76 in, 9.40 in, 22.56º, 8.143 in, 20.357 in)